SELECTION
DESIGN + ENGINEERING
GROHE GERMANY

99.1430.031/ÄM 246459/12.19

www.grohe.com

Pure Freude an Wasser

GROHE

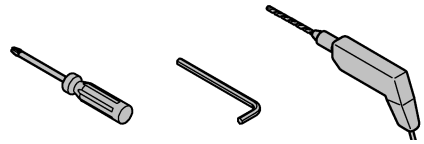

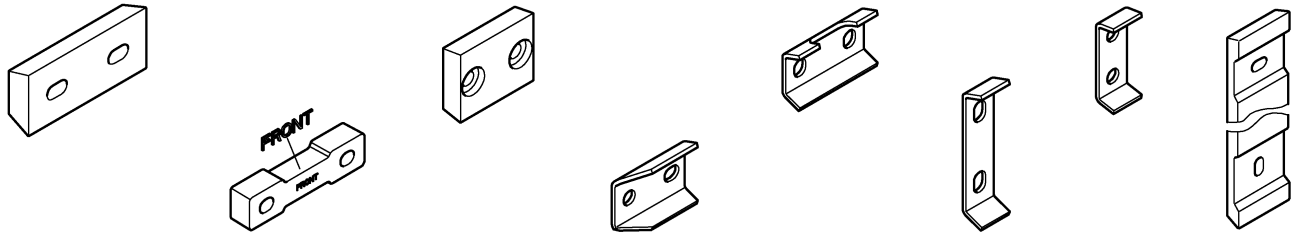

1

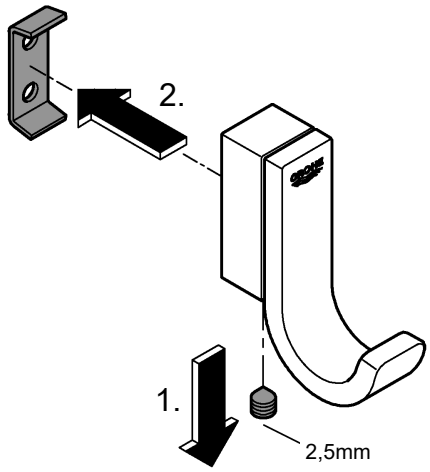

2

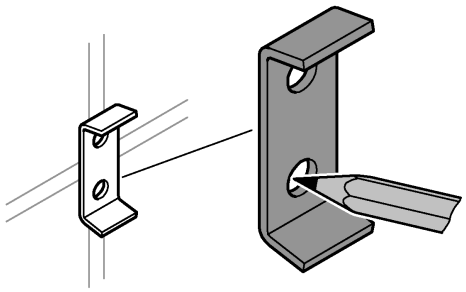

3

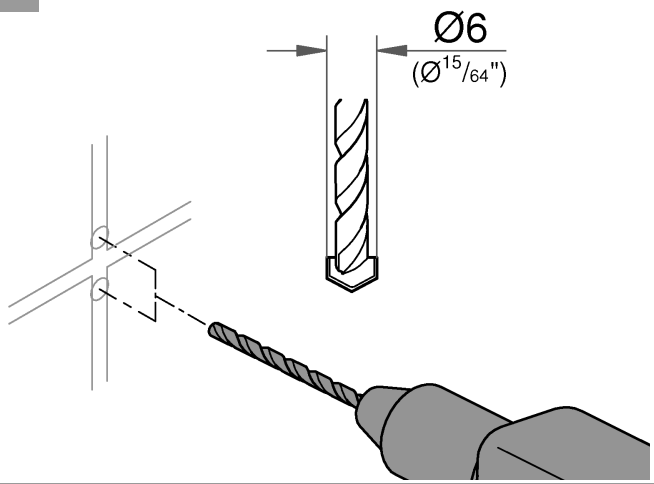

4

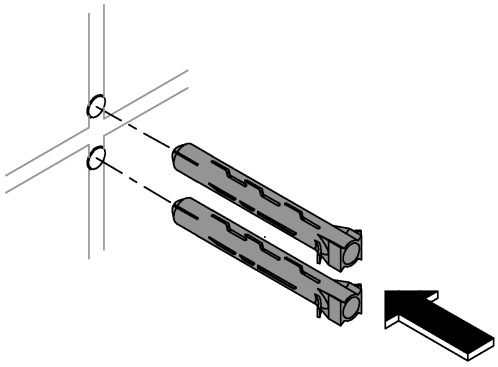

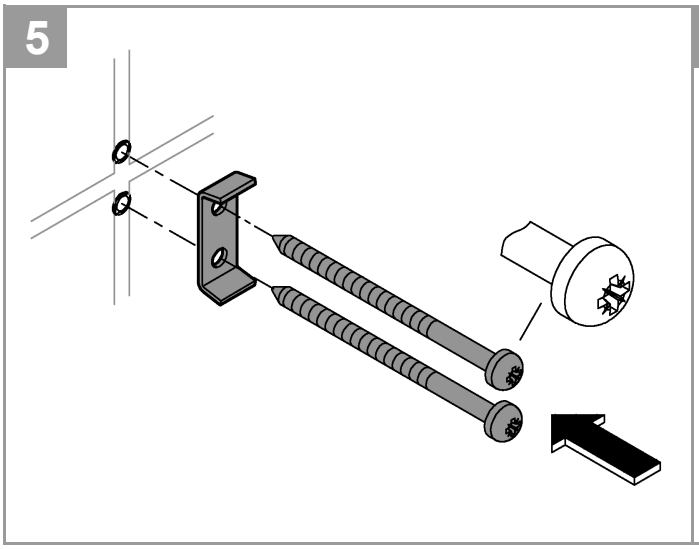
5

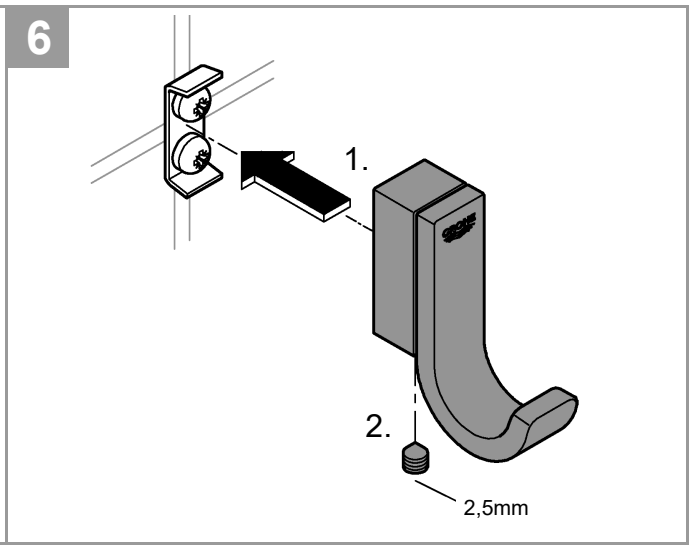
6
1.
2.
2,5mm

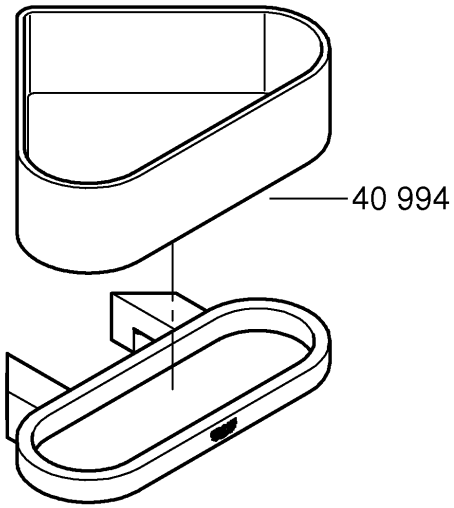
40 994

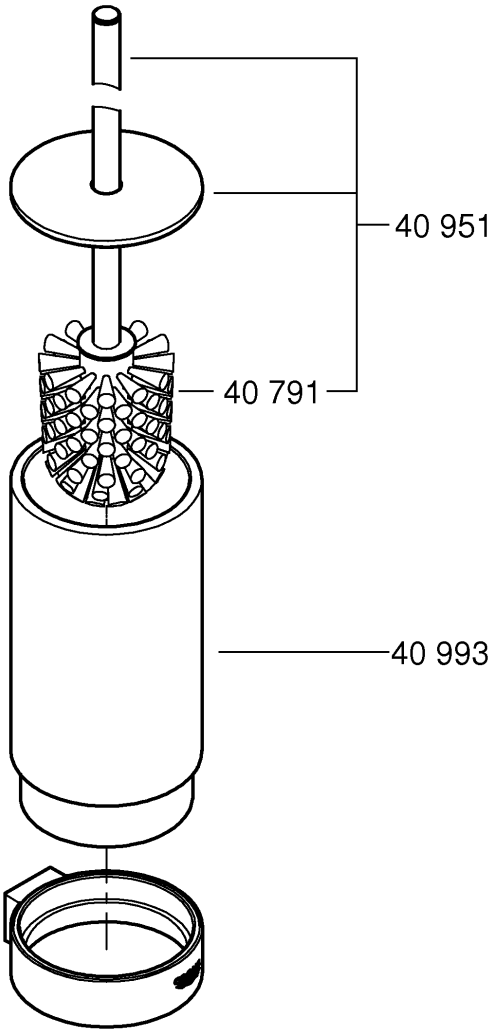
40 951
40 791
40 993