2

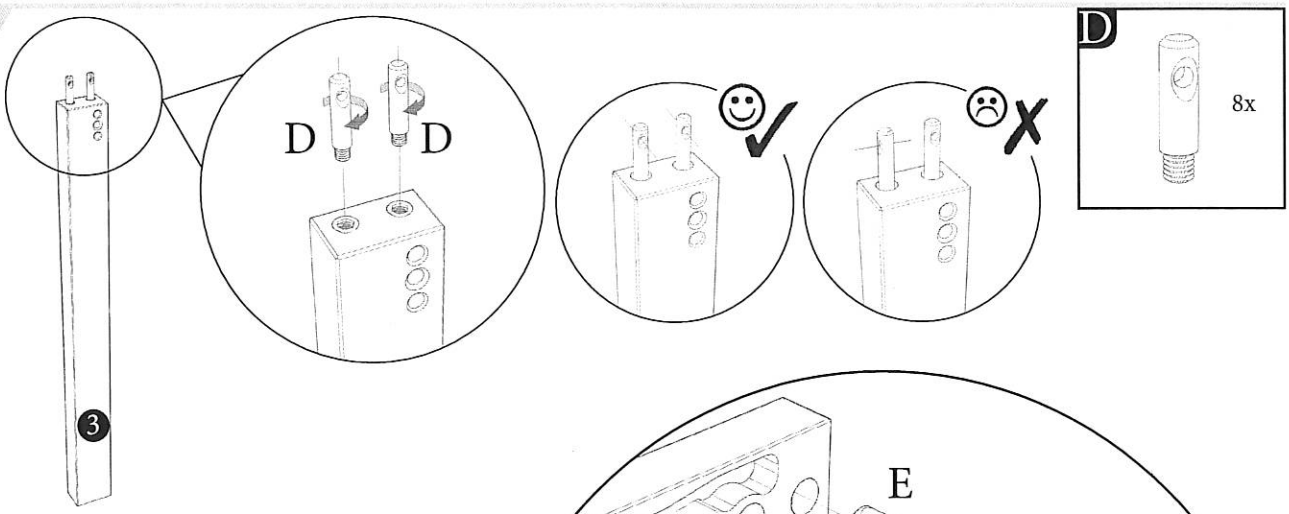

3

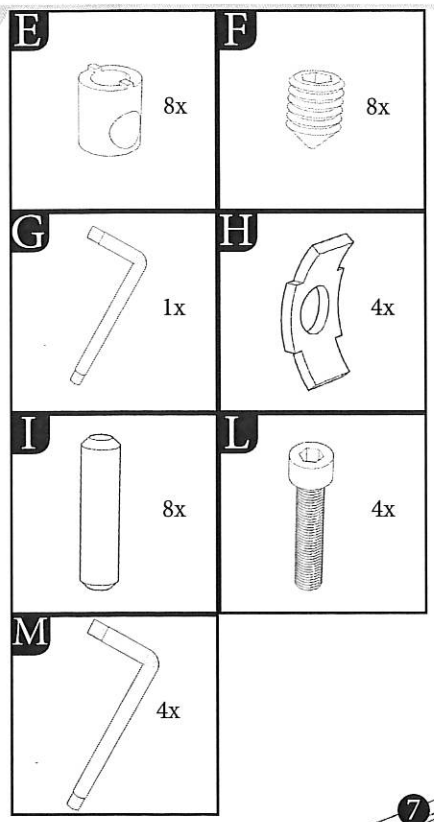

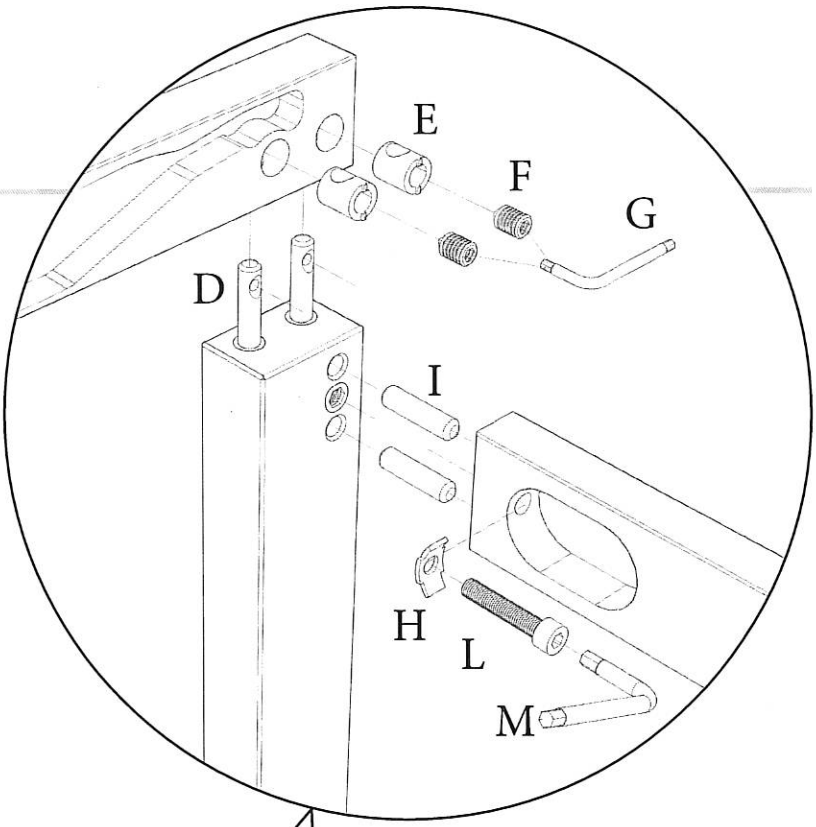

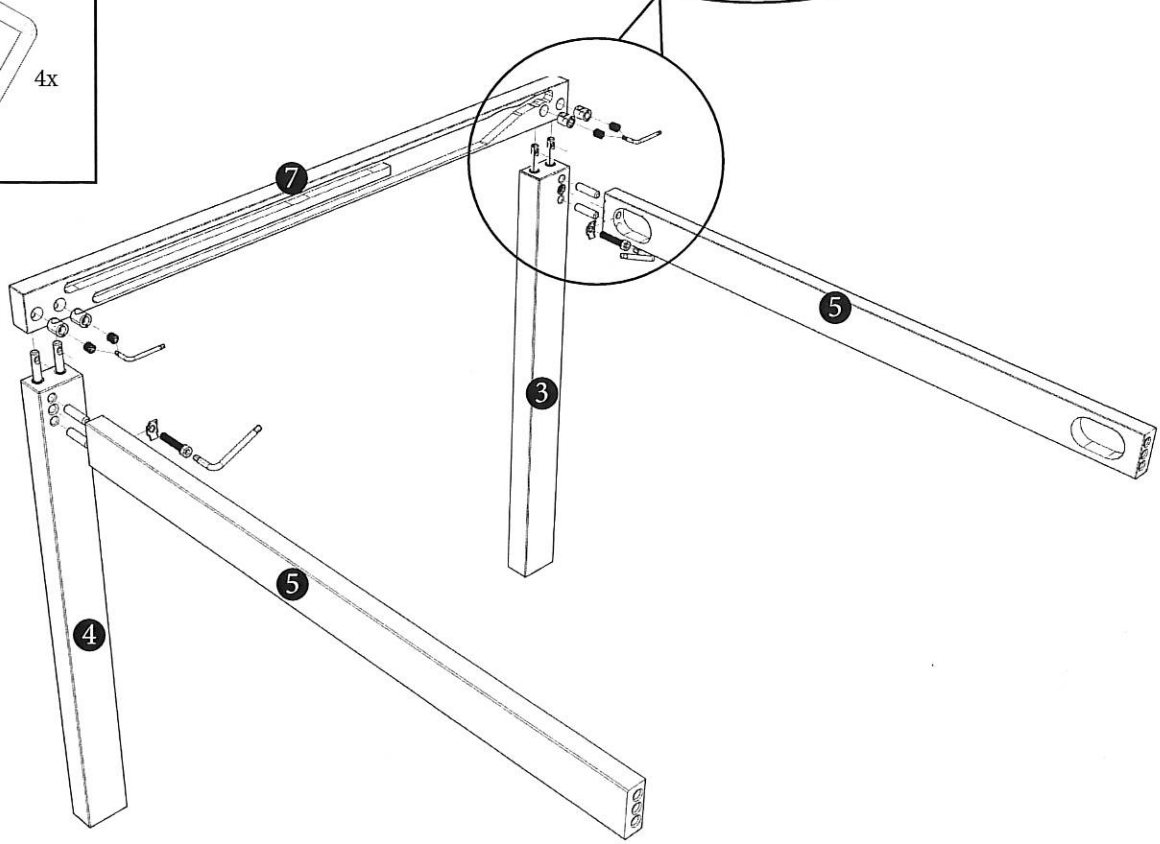

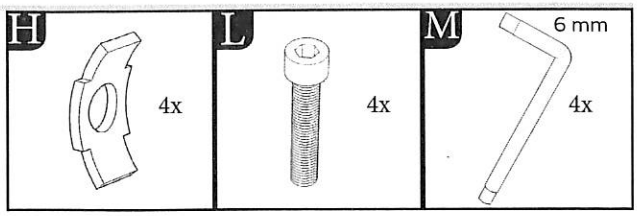
H
4x
L
4x
M
6 mm
4x

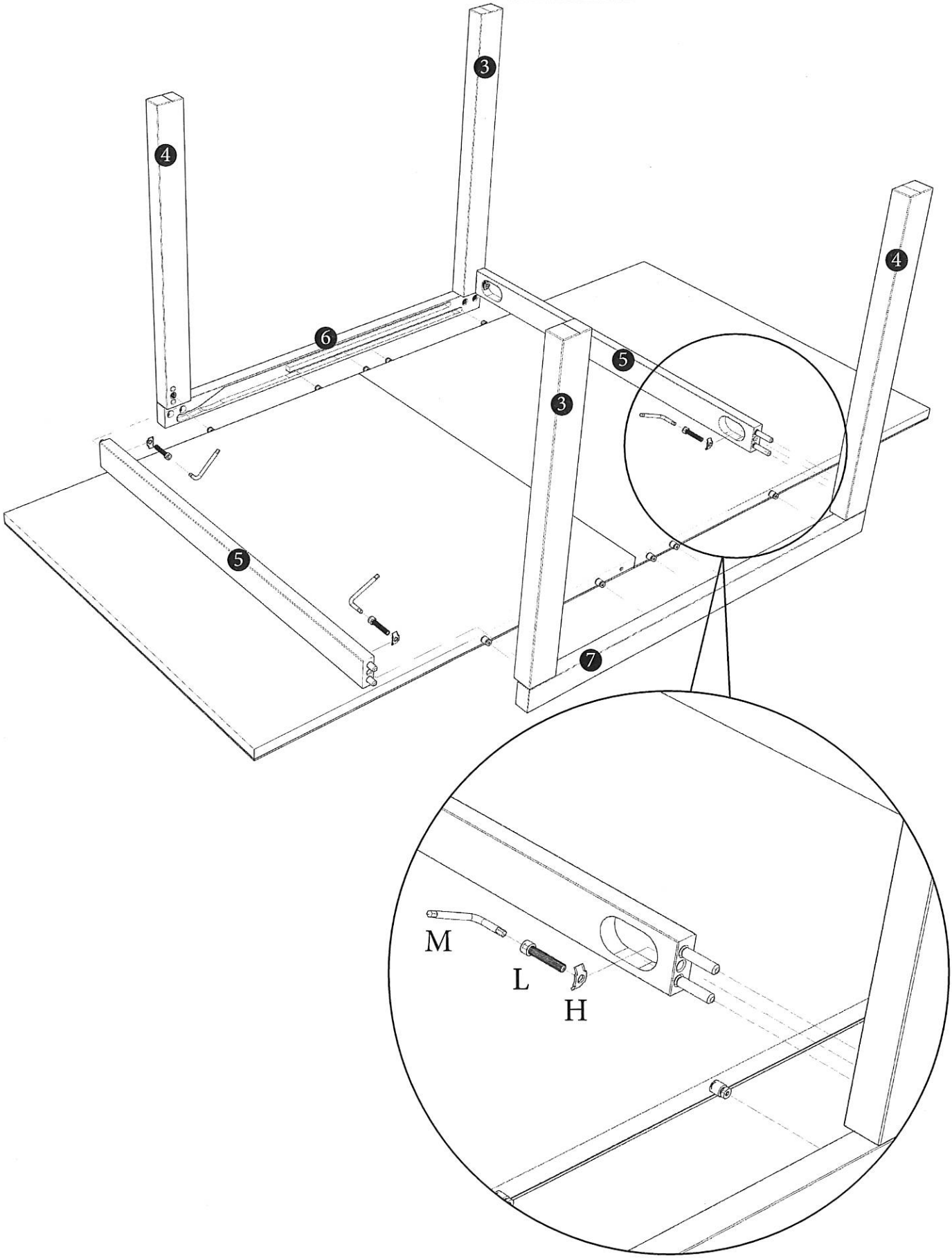
3
4
4
6
5
3
5
7
M
L
H